SECTION PB
PARKING BRAKE SYSTEM

CONTENTS

PARKING BRAKE SYSTEM 2
On-Vehicle Service 2
LEVER STROKE 2
INSPECT COMPONENTS 2
ADJUSTMENT 2
PARKING BRAKE CONTROL 3
Components 3
Removal and Installation 3
REMOVAL 3
INSTALLATION 3
PARKING BRAKE SHOE 4
Components 4
Removal and Installation 4
REMOVAL 4
INSPECTION AFTER REMOVAL 5
INSTALLATION 6
SERVICE DATA AND SPECIFICATIONS (SDS) 7
Parking Drum Brake 7
Parking Brake Control 7

PARKING BRAKE SYSTEM

PFP:36010

On-Vehicle Service

AFS002LH

LEVER STROKE

- Operate parking brake lever with a force of 196 N (20 kg, 44 lb), make sure lever stroke is within the specified number of notches. (Check it by listening and counting ratchet clicks.)

Lever stroke : 6 - 7 notches

INSPECT COMPONENTS

- Make sure that the mounting conditions (looseness, backlash, etc.) of each component are normal.
- Check the following:
  - Device assembly for bend, damage and cracks. Replace if there are.
  - Cables and equalizer for wear and damage. Replace if there are.
  - Parking brake warning lamp switch. Replace if it does not work correctly.

ADJUSTMENT

- To perform adjustment operations, remove rear tires from vehicle with a power tool.

1. Insert a deep socket wrench onto adjusting nut. Rotate adjusting nut to fully loosen cable, and then release parking brake lever.
2. Secure disc rotor to hub using wheel nut so as not to tilt disc rotor.

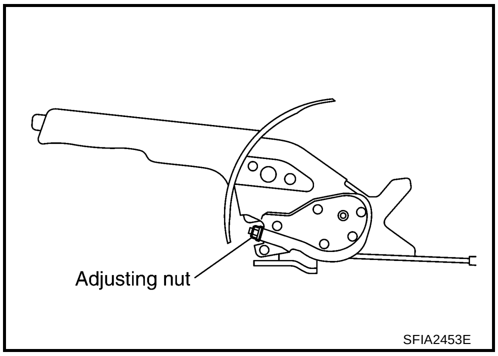

3. Remove adjuster hole plug installed on disc rotor. Turn the adjuster in direction “A” using a flat-bladed screwdriver as shown, until disc rotor is locked. Turn the adjuster in the opposite direction by 5 or 6 notches after locking.
4. Rotate disc rotor to make sure that there is no drag. Install the adjuster hole plug.
5. Adjust parking brake cable with the following procedure.

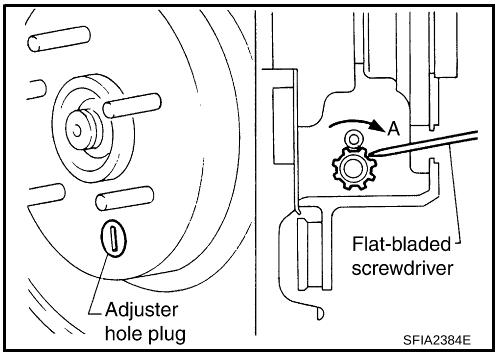

a. Operate parking brake lever 10 or more times with the force 294 N (30 kg, 66 lb).

b. Rotate adjusting nut to adjust parking brake lever stroke using a deep socket wrench.

CAUTION:
Do not reuse the adjusting nut after removing it.

c. Operate parking brake lever with a force of 196 N (20 kg, 44 lb), make sure the lever stroke is within the specified number of notches. (Check it by listening and counting ratchet clicks.)

Lever stroke : 6 - 7 notches

d. Make sure that there is no drag on rear brake with parking brake lever completely released.

PARKING BRAKE CONTROL

PFP:36010

Components

AFS002LI

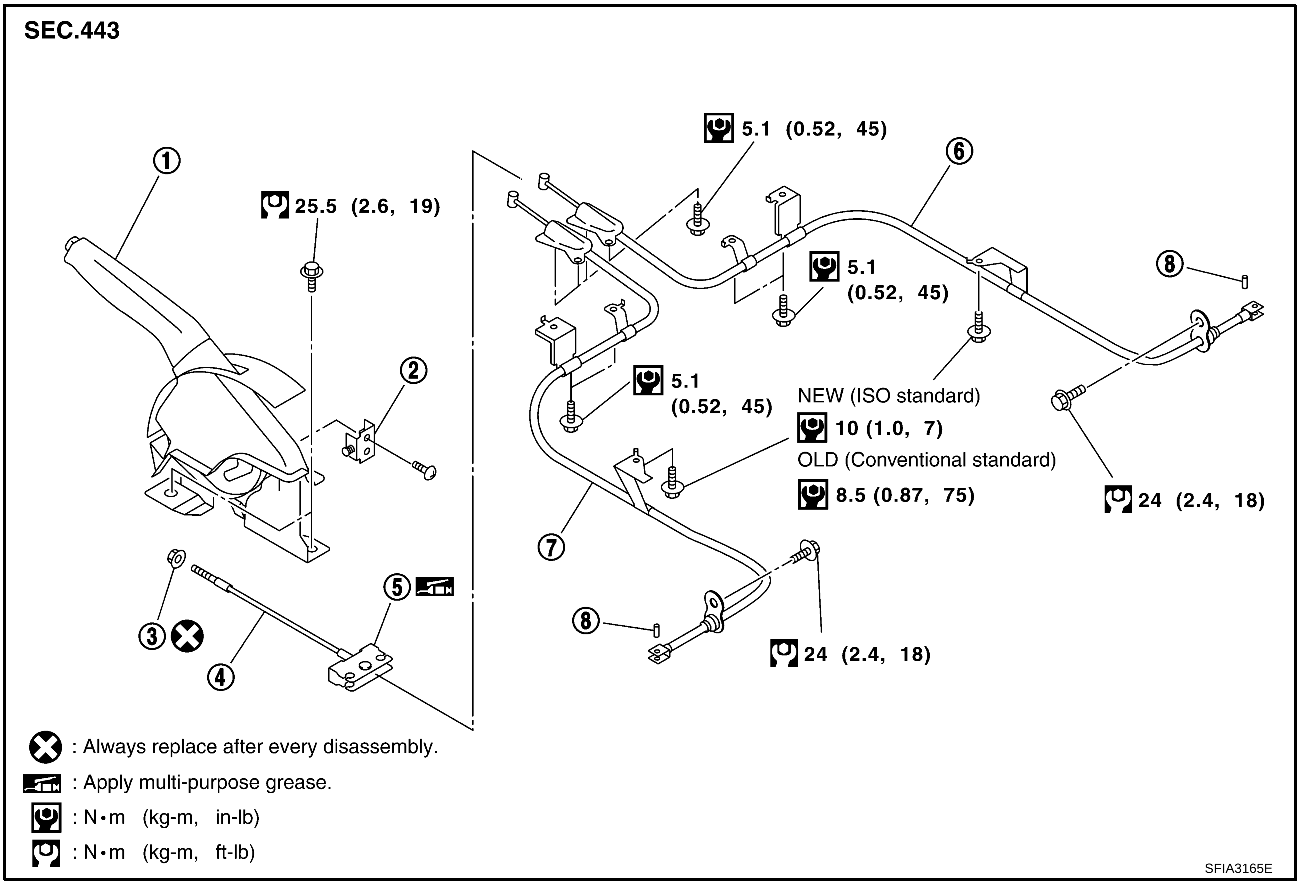

1.	Device assembly	2.	Parking brake warning lamp switch	3.	Adjusting nut
4.	Front cable	5.	Equalizer	6.	RH rear cable
7.	LH rear cable	8.	Pin		

NOTE:
In regard to the notation of torque in the illustration, NEW shows an ISO standard, OLD shows a conventional standard, and the measurements of hexagonal width across flats are in parentheses.

Removal and Installation

AFS002LJ

REMOVAL

1. Remove rear tires from vehicle with a power tool.
2. Release parking brake lever.
3. Remove center console. Refer to IP-10, "INSTRUMENT PANEL ASSEMBLY"
4. Disconnect parking brake warning lamp switch connector.
5. Remove adjusting nut and loosen front cable.
6. Remove device assembly mounting bolts and remove device assembly from vehicle.
7. Separate rear cable from front cable, remove front cable from vehicle.
8. Remove heat insulator of the three way catalyst and the exhaust center tube from vehicle.
9. Remove parking brake shoe, and remove rear cable from toggle lever. Refer to PB-4, "PARKING BRAKE SHOE"
10. Remove rear cable mounting bolts, pull out rear cable from vehicle.

INSTALLATION

1. Install in the reverse order of the removal. Refer to PB-3, "Components" for tightening torque.

   CAUTION:

   Do not reuse adjusting nut.
2. Adjust parking brake. Refer to PB-2, "ADJUSTMENT" .

PARKING BRAKE SHOE

PFP:44060

Components

AFS002LK

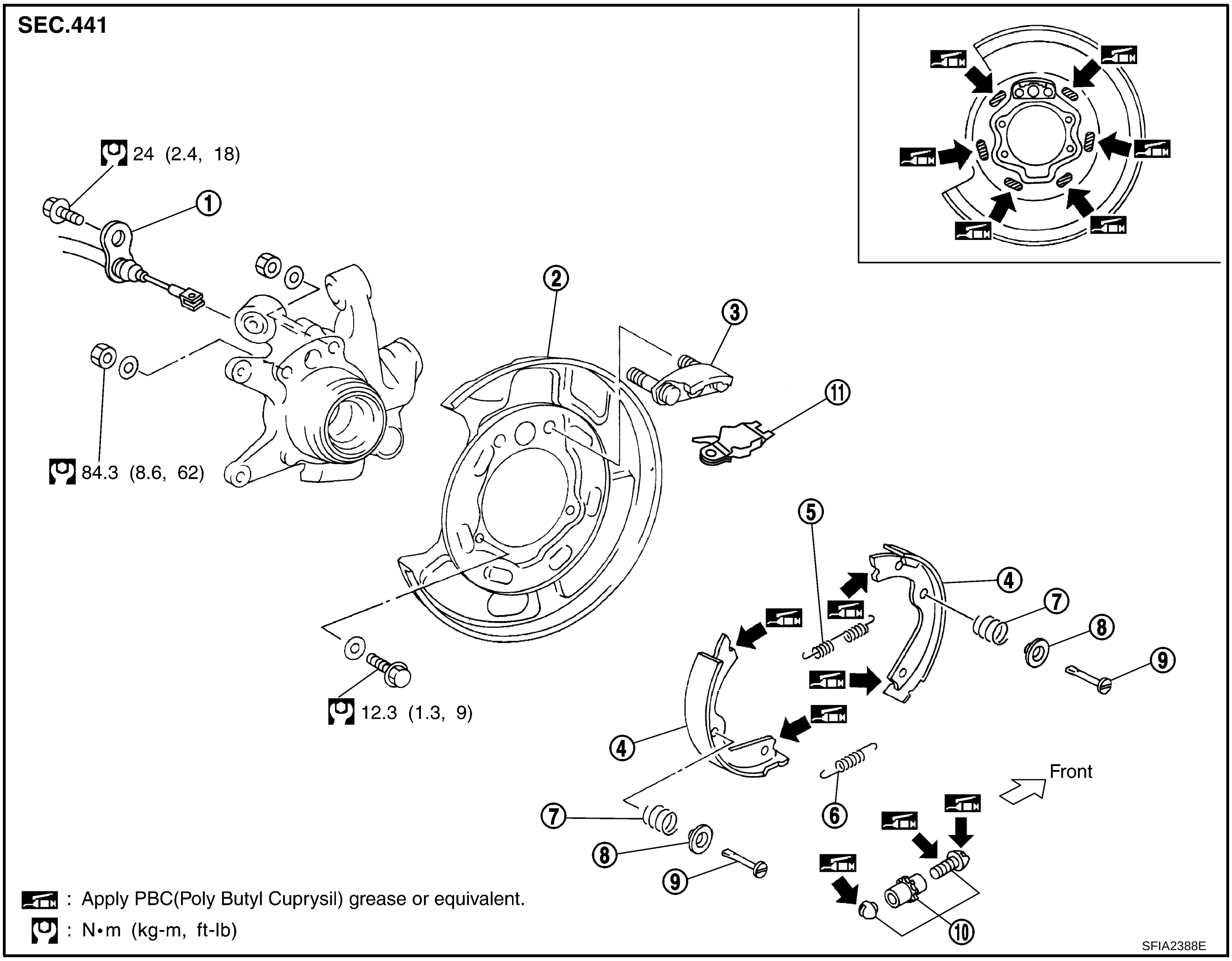

1.	Parking cable	2.	Back plate	3.	Anchor block
4.	Brake shoe	5.	Return spring	6.	Return spring
7.	Anti-rattle spring	8.	Retainer	9.	Anti-rattle pin
10.	Adjuster assembly	11.	Toggle lever		

Removal and Installation

AFS002LL

REMOVAL

WARNING:

Clean brakes with a vacuum dust collector to minimize the hazard of air borne particles or other materials.

CAUTION:

- **Clean dust on disc rotor and back plate using a vacuum dust collector. Do not blow with compressed air.**
- **Put matching marks on both disc rotor and wheel hub when removing disc rotor.**

1. Remove rear tires from vehicle with a power tool.
2. Remove disc rotor with parking brake lever completely in the released position. Refer to BR-32, "Removal and Installation of Brake Caliper Assembly" .
3. If disc rotor cannot be removed, remove as follows:

a. Secure the disc rotor in place with wheel nuts and remove adjuster hole plug.

b. Using a flat-bladed screwdriver, rotate adjuster in direction “B” to retract and loosen brake shoe.
4. Remove anti-rattle pins, retainers, anti-rattle springs, and return springs.
5. Remove parking brake shoes, adjuster assembly, and toggle lever.
6. About the removal of back plate, refer to RAX-7, "Disassembly and Assembly" .

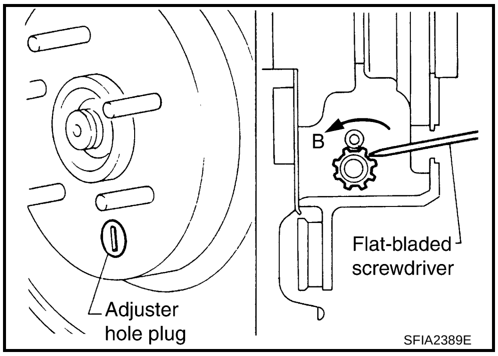

INSPECTION AFTER REMOVAL
Lining Thickness Inspection
- Check thickness of lining.

Standard thickness (new) “A”	**: 3.5 mm (0.138 in)**
Repair limit thickness “A”	**: 1.5 mm (0.059 in)**

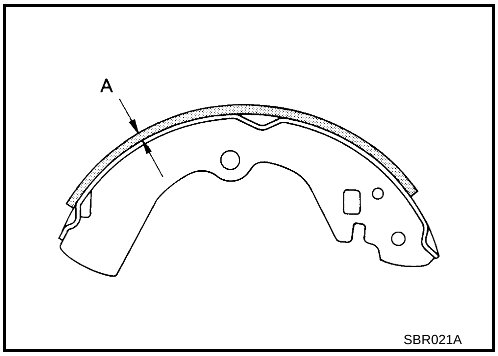

Drum Inner Diameter Inspection
- Check inner diameter of drum.

Standard inner diameter (new)	**: 172 mm (6.77 in) dia.**
Maximum inner diameter	**: 173 mm (6.81 in) dia.**

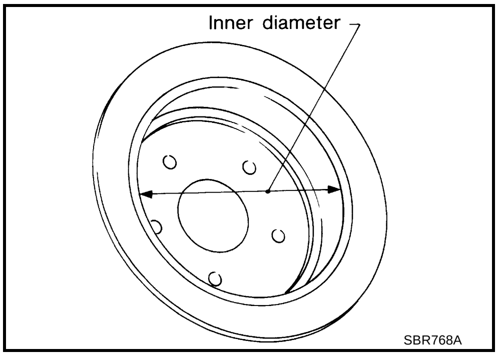

Other Inspections
- Check the following:
  - Lining for excessive wear, damage, and peeling.
  - Shoe sliding surface for excessive wear and damage.
  - Anti-rattle pin for excessive wear and corrosion.
  - Return spring for sagging.
- Make sure that adjuster moves smoothly.
- Visually check the inside of drum for excessive wear, cracks, and damage. Check the inside of drum using a pair of vernier calipers.
- Replace with new part if the above part is malfunction.
- When disassembling adjuster, apply PBC (Poly Butyl Cuprysil) grease or equivalent to the threads. Refer to MA-10, "RECOMMENDED FLUIDS AND LUBRICANTS" .

INSTALLATION

Be careful of the following, and install in the reverse order of the removal.

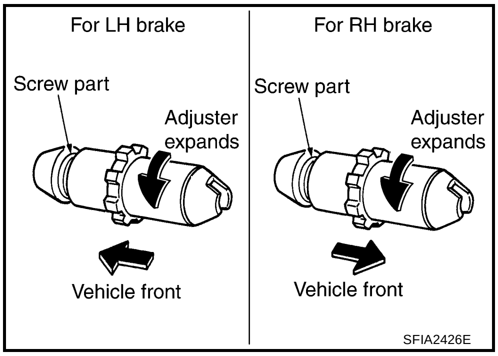

- Refer to PB-4, "Components" and apply PBC (Poly Butyl Cuprysil) grease or equivalent to the specified points during assembly.
- Assemble adjusters so that threaded part is expanded when rotating it in the direction shown by arrow.
- Shorten adjuster by rotating it.
- Check shoe sliding surface and drum inner surface for grease. Wipe it off if it adhere on the surfaces.
- Perform break-in operation as follows after replacing brake shoes or disc rotors, or if brakes do not function well.

1. Adjust parking brake lever stroke to the specified amount. Refer to PB-2, "ADJUSTMENT" .
2. Perform parking brake break-in (drag run) operation by driving vehicle under the following conditions:

   Drive forward
   - **Vehicle speed: Approx. 5 km/h (3 MPH) set (constant and forward)**
   - **Parking brake operating force: Approx. 250 N (26 kg, 112 lb) set constant**
   - **Time: Approx. 30 sec.**
3. Check parking brake lever stroke of parking brake. Adjust again if it is outside the standard.

SERVICE DATA AND SPECIFICATIONS (SDS)

PFP:00030

Parking Drum Brake

AFS002LM

Type		DS17H
Brake lining	Standard thickness (new)	3.5 mm (0.138 in)
	Wear limit thickness	1.5 mm (0.059 in)
Drum (disc)	Standard inner diameter (new)	172 mm (6.77 in) dia.
	Wear limit of inner diameter	173 mm (6.81 in) dia.

Parking Brake Control

AFS002LN

Control type	Center lever
Number of notches [under force of 196 N (20 kg, 44 lb)]	6 – 7 notches
Number of notches when parking brake warning lamp switch comes on	1 notch